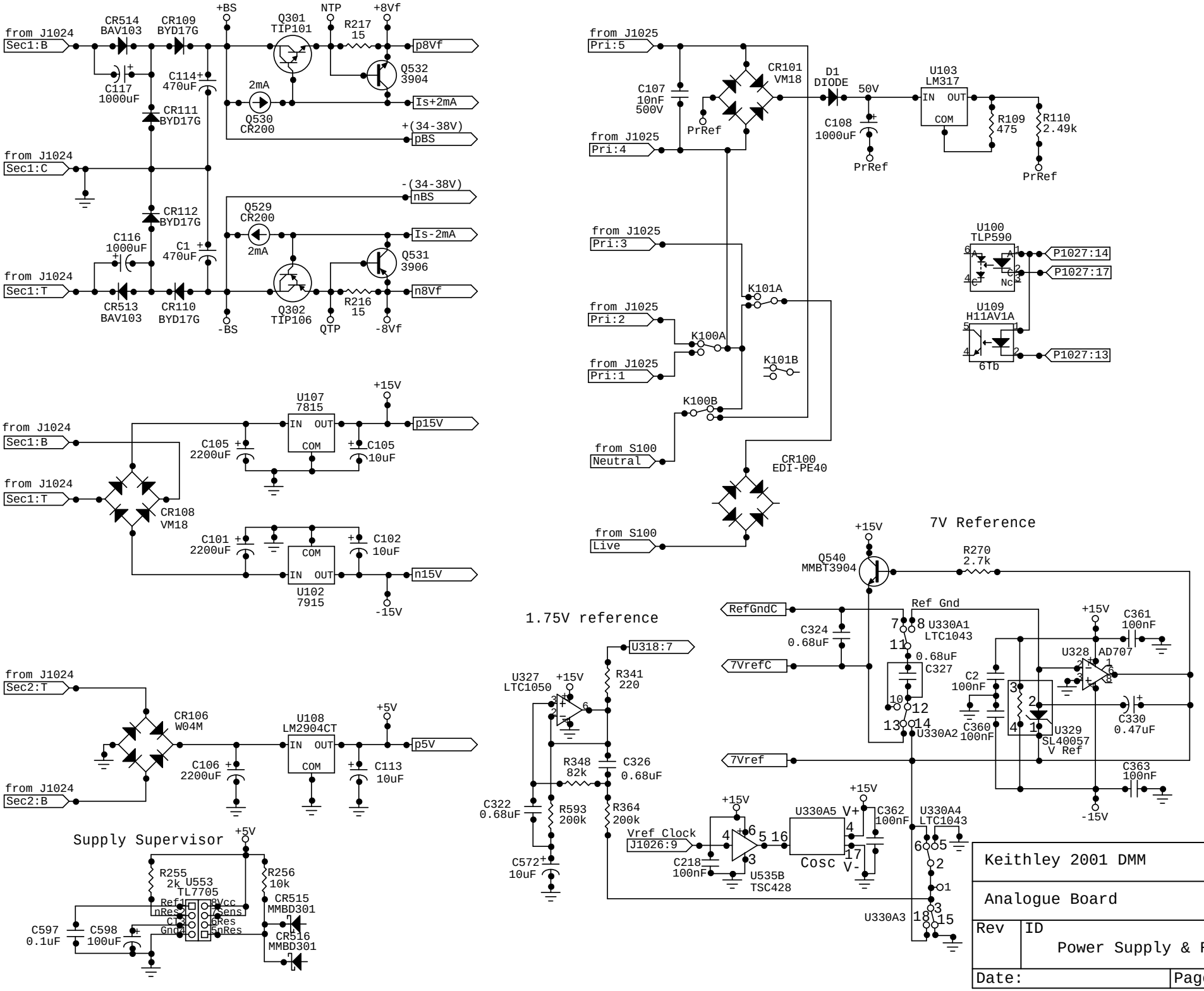

Keithley 2001 DMM

Analogue Board

Rev	ID
	Power Supply & Reference section
Date:	Page: 1 of 1