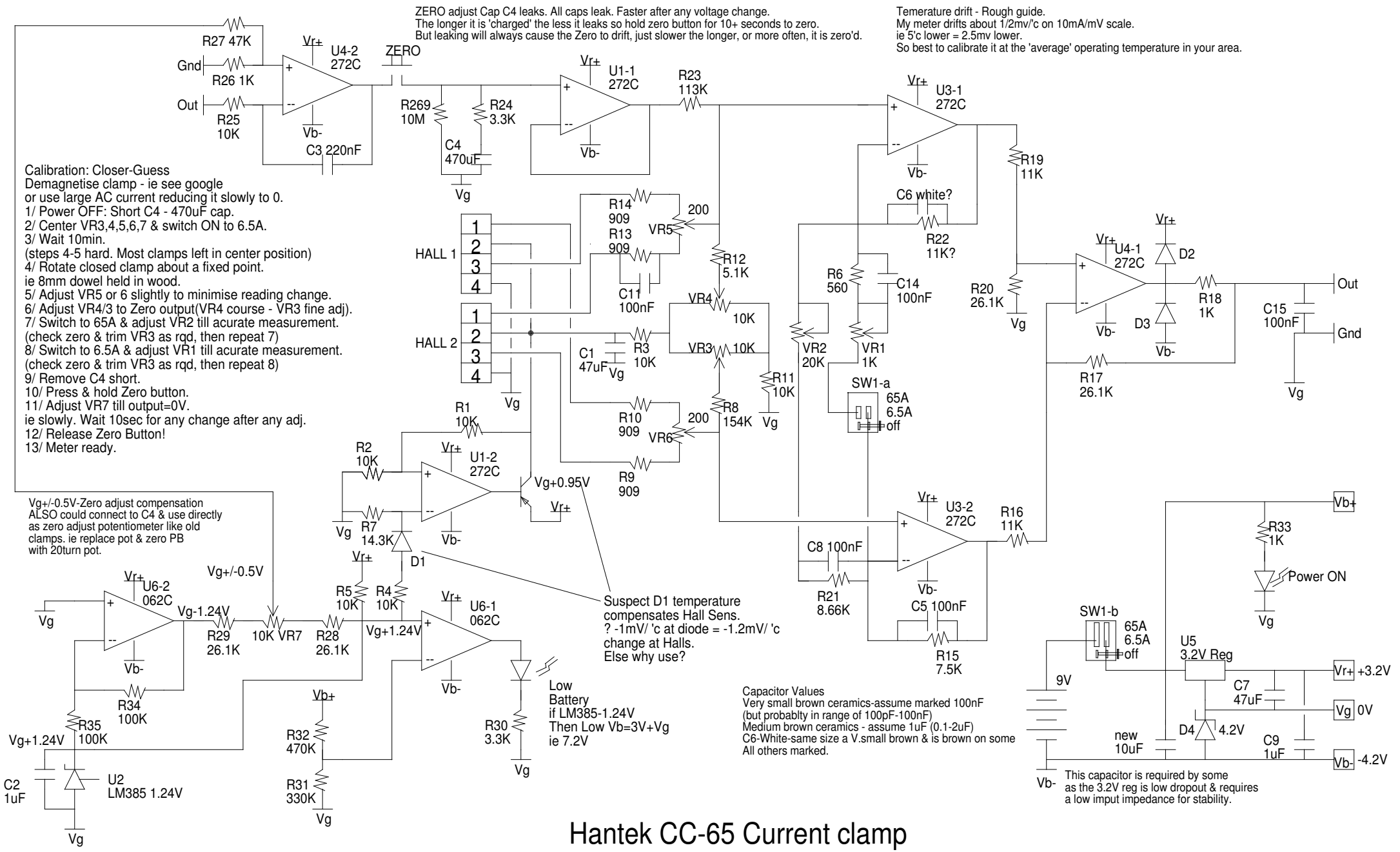

Hantek CC-65 Current clamp

Circuit compiled from EEVBlog notes & photos & some measurements from mine.