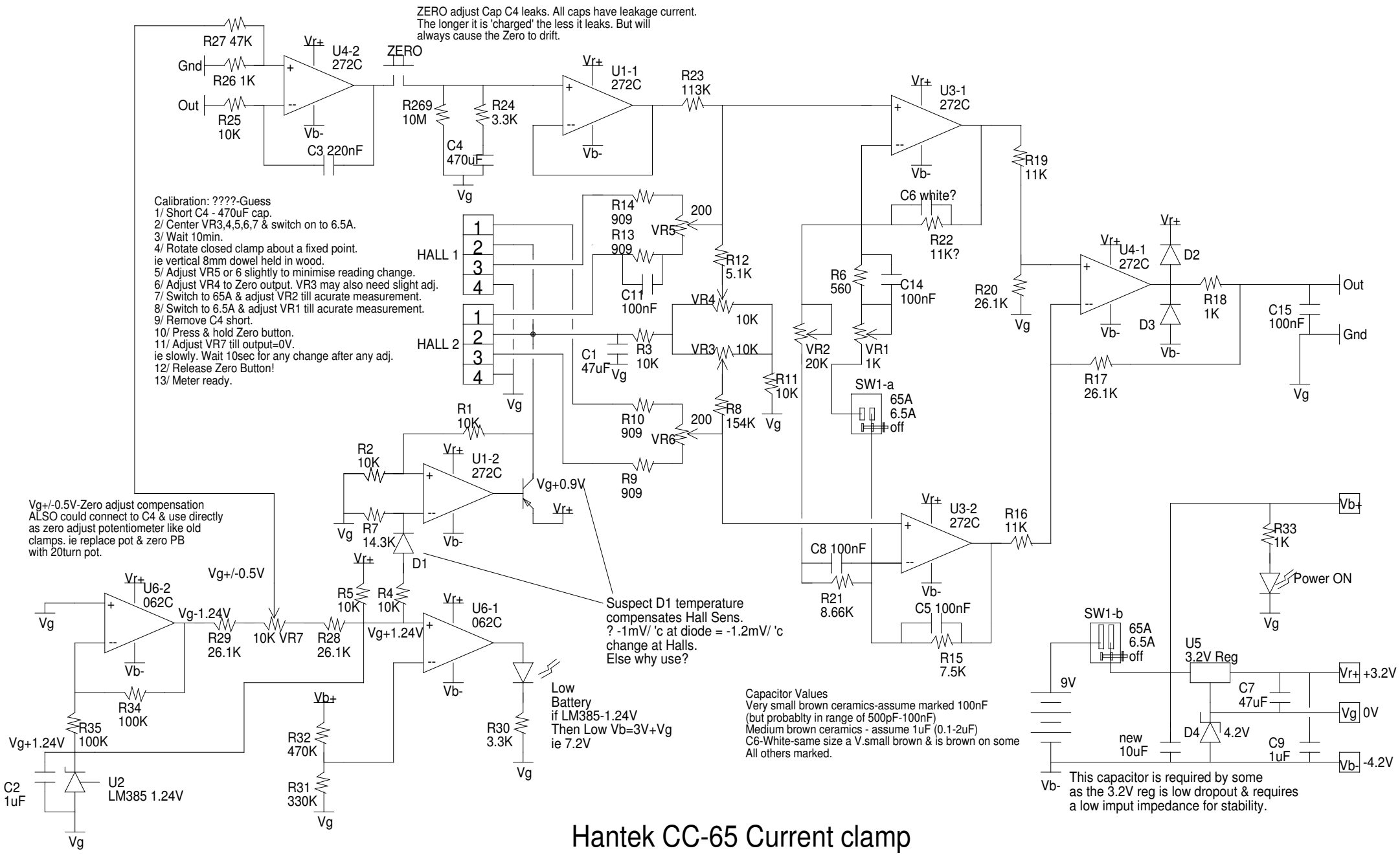

Hantek CC-65 Current clamp

WARNING: Circuit compiled from others notes & photos ONLY