P/O A1 MAIN BOARD

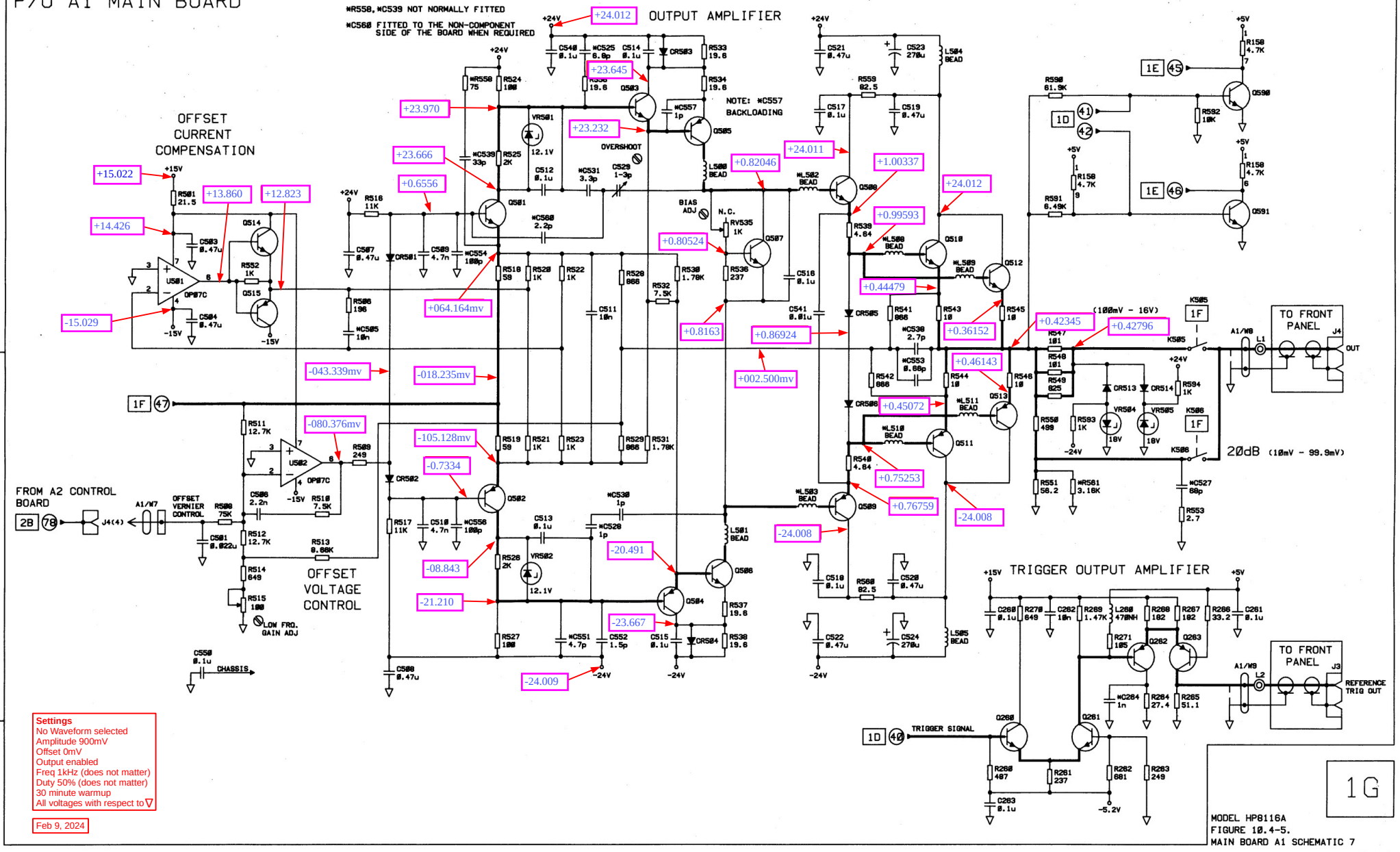

Settings
No Waveform selected
Amplitude 900mV
Offset 0mV
Output enabled
Freq 1kHz (does not matter)
Duty 50% (does not matter)
30 minute warmup
All voltages with respect to ▽

Feb 9, 2024

MODEL HP8116A
FIGURE 10.4-5.
MAIN BOARD A1 SCHEMATIC 7