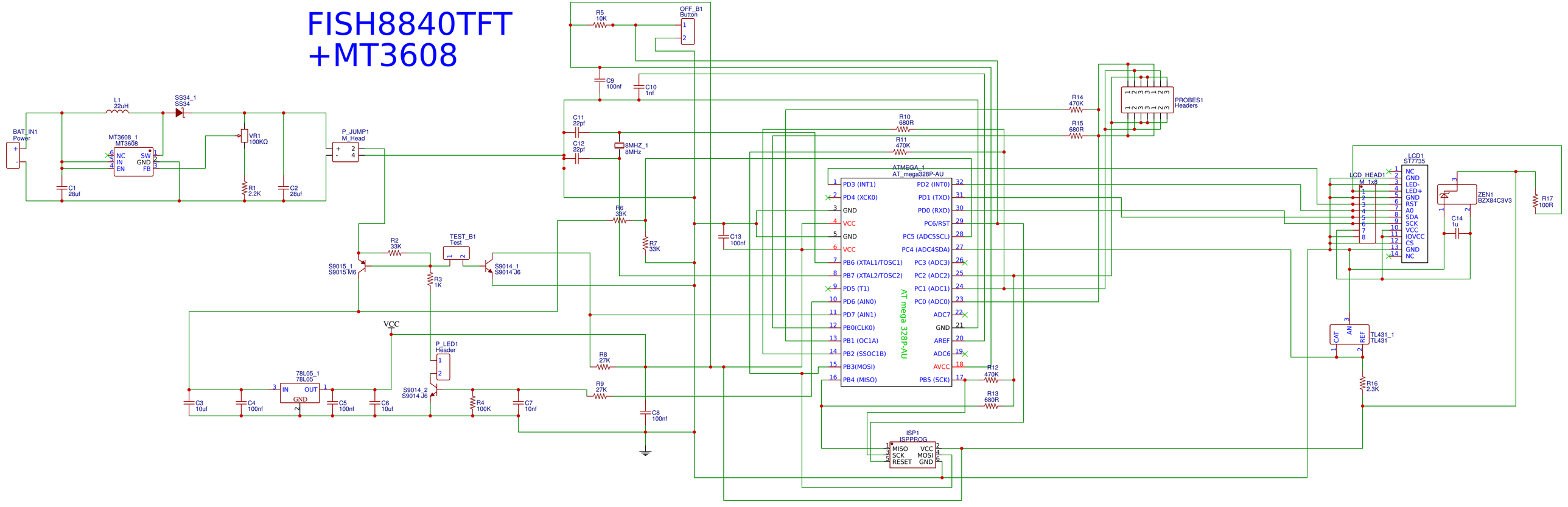FISH8840TFT +MT3608