NOTES: (UNLESS OTHERWISE SPECIFIED)

REVISIONS				
ECO	LTR	DESCRIPTION	DATE	APPROVED

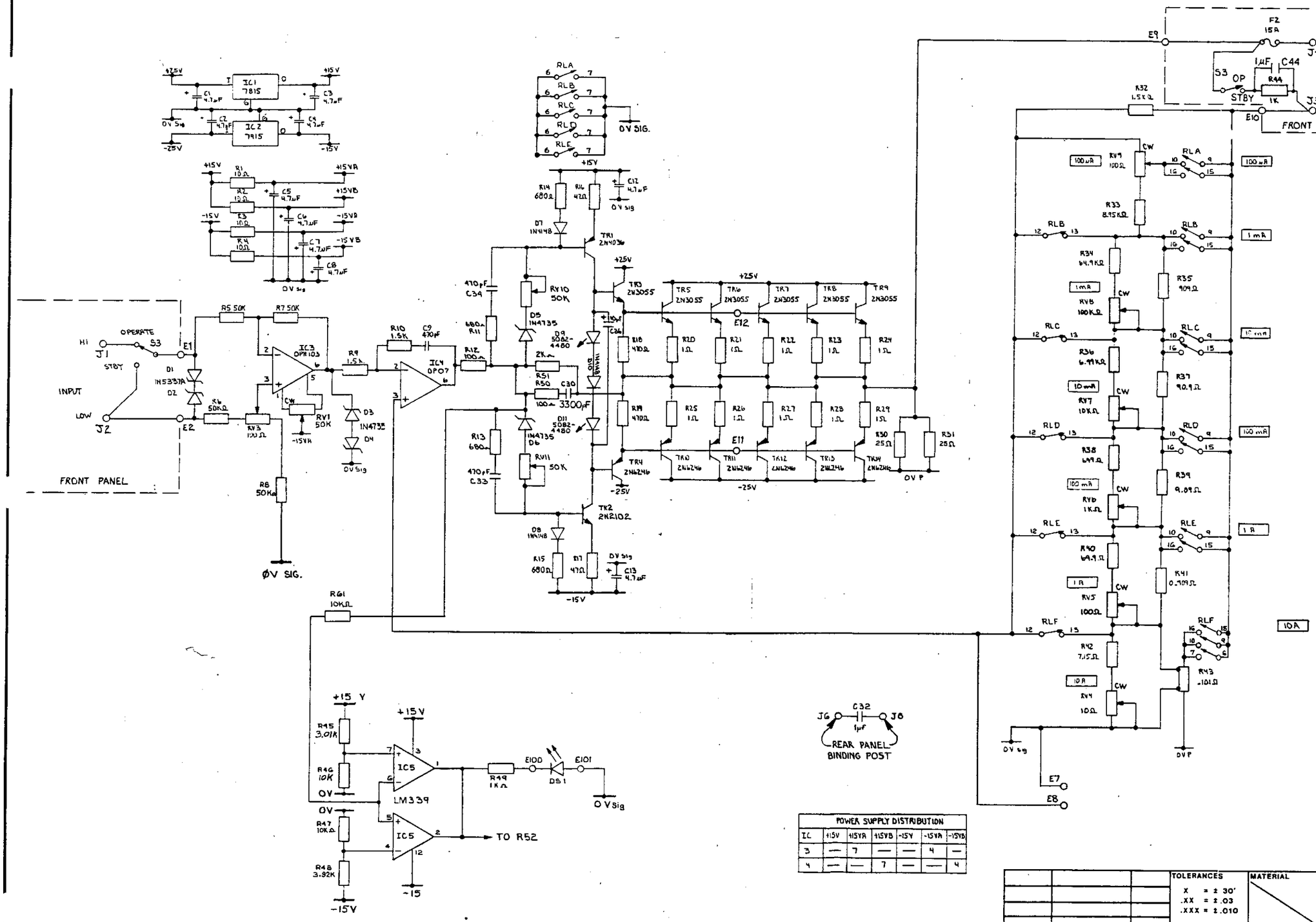

POWER SUPPLY DISTRIBUTION						
IC	+15V	+15VA	+15VB	-15V	-15VA	-15VB
3	—	7	—	—	4	—
4	—	—	7	—	—	4

TOLERANCES: X = ± 30' .XX = ± .03 .XXX = ± .010	MATERIAL	Valhalla Scientific Inc. SAN DIEGO, CA		
BREAK ALL SHARP CORNERS AND EDGES. MACH SURFACES 64	FINISH	MAIN BOARD SCHEMATIC 2500EP		
		SCALE ____ SHEET 1 OF 2	CODE IDENT 53504	SIZE D	DRAWING NO 2500 - 074	REV Y