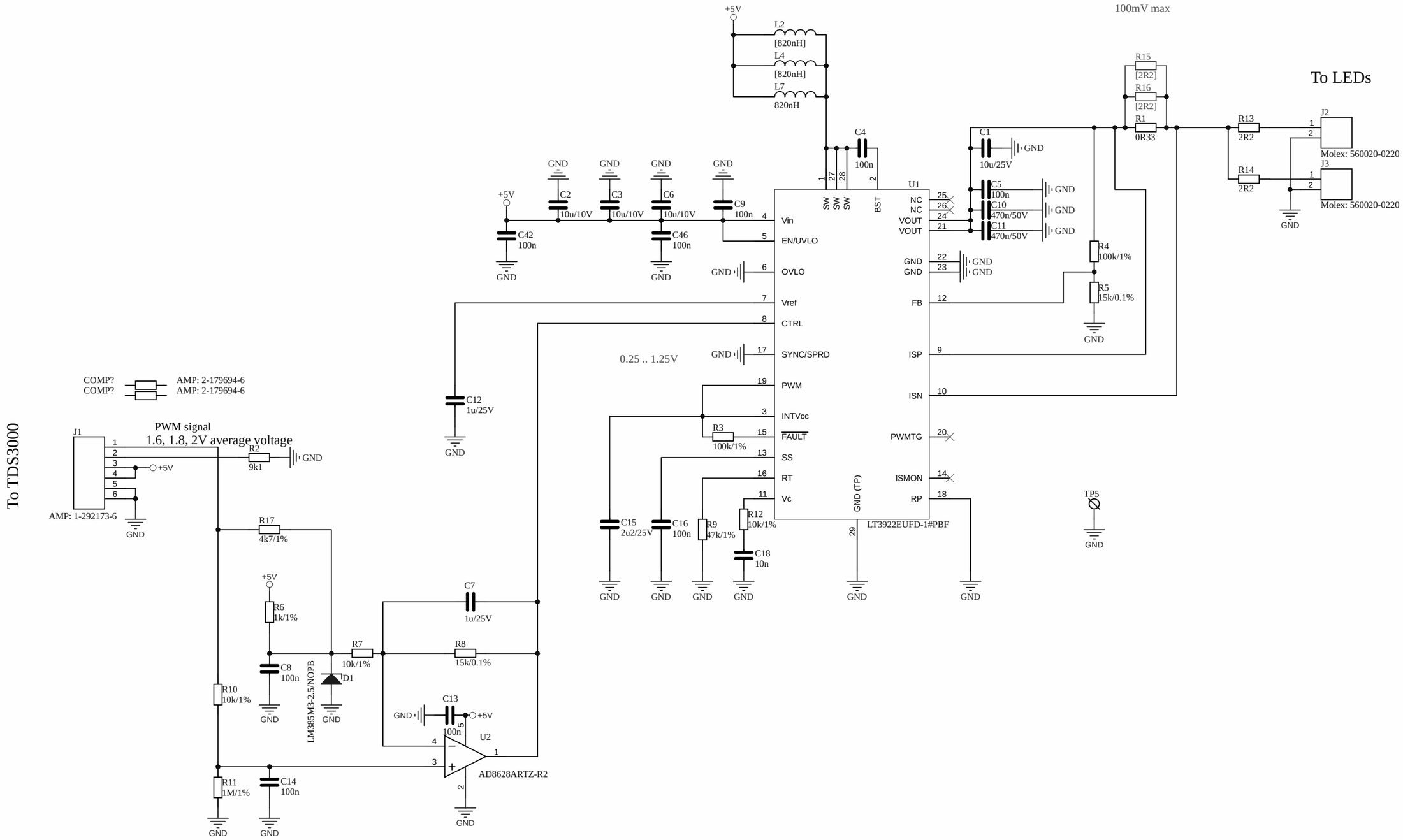


| REV | RELEASE DESCRIPTION | DRAFTER | DATE |
|---|---|---|---|
| | | | |

CIRCUIT
**LED Driver**

BOARD NAME
**TDS3000 LED Backlight**

REV: **A**

SHEET: **1** of **1**