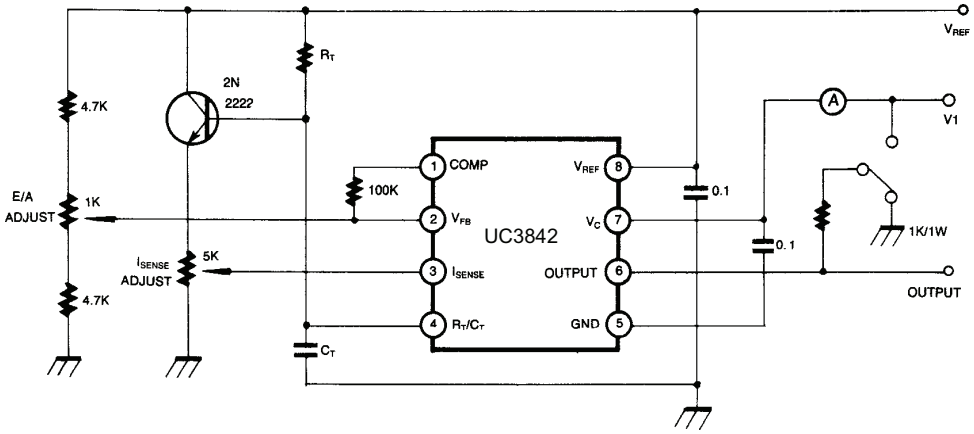

Figure 1. Open Loop Test Circuit