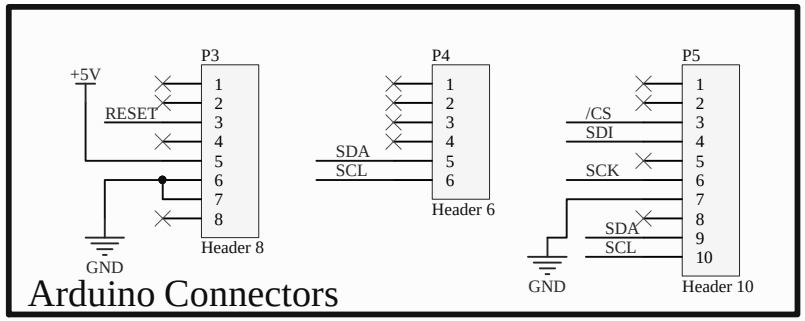


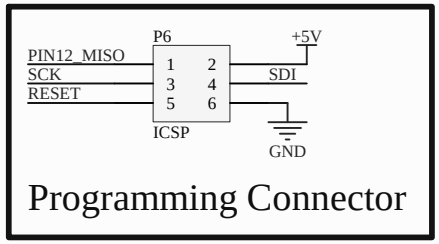


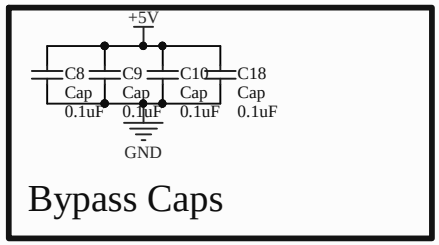


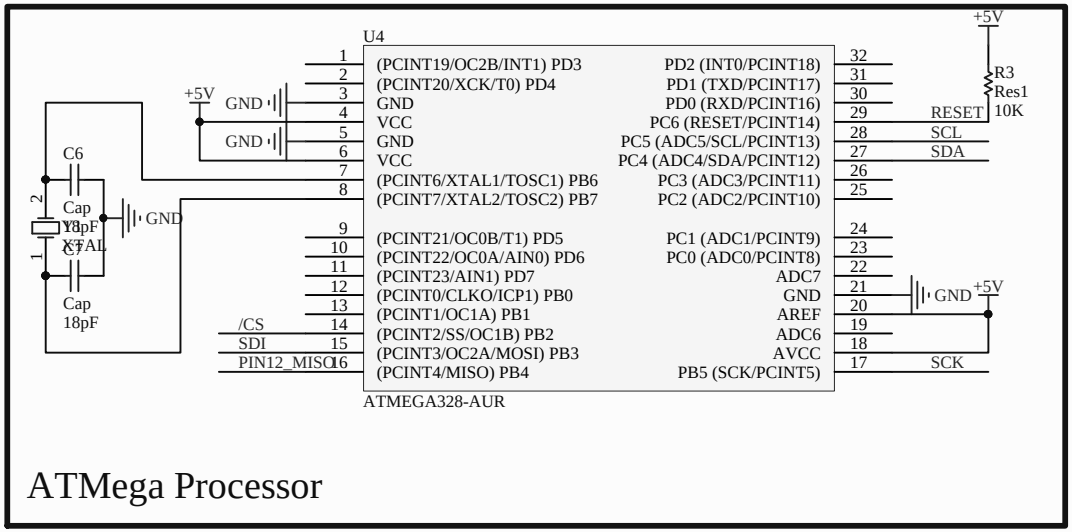


| Title | | |
|---|---|---|
| Size A4 | Number | Revision |
| Date: 16-09-2016 | | Sheet of |
| File: C:\Users\..\Arduino.SchDoc | | Drawn By: |