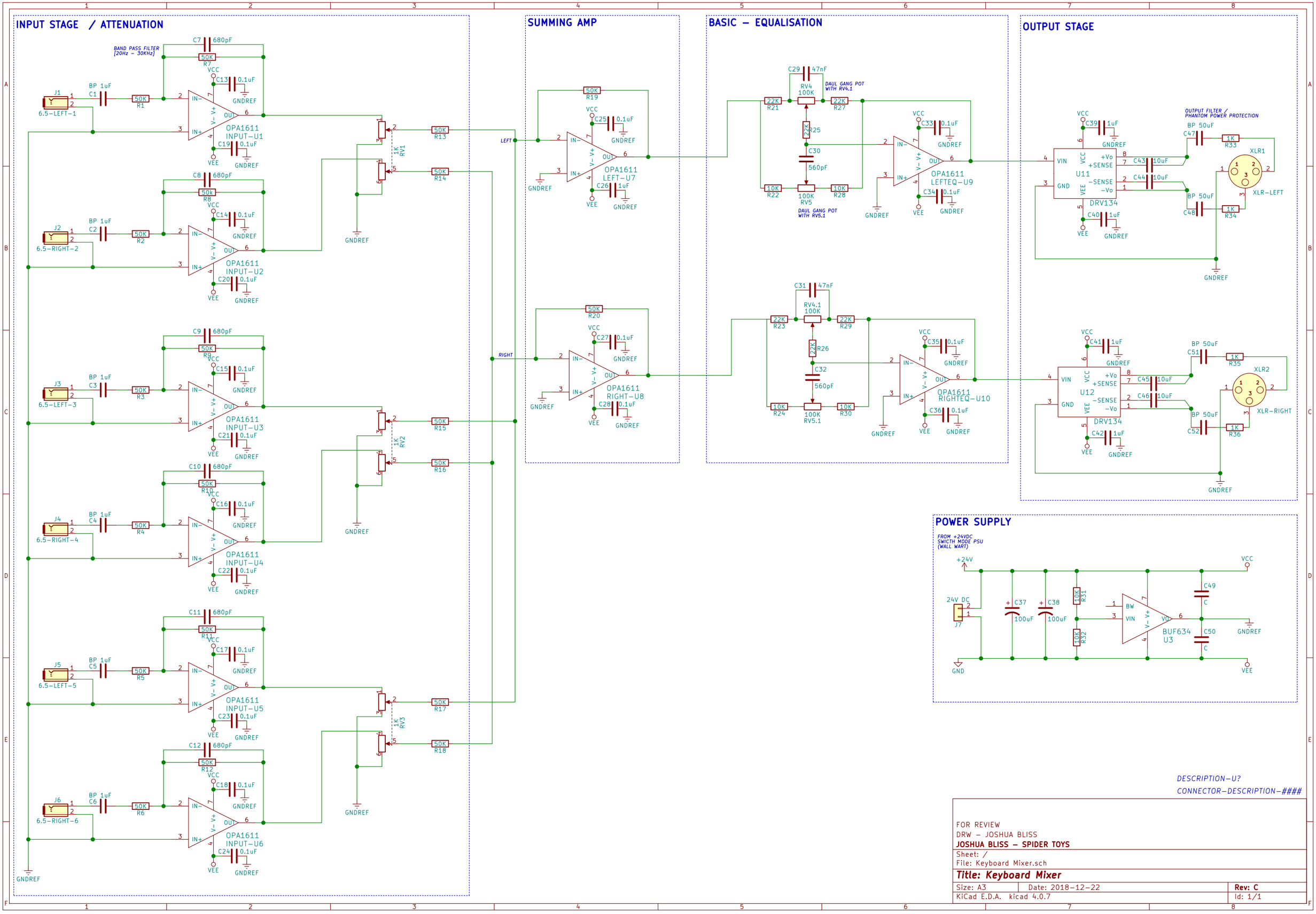
INPUT STAGE / ATTENUATION
BAND PASS FILTER [20Hz – 30KHz]
SUMMING AMP
BASIC – EQUALISATION
OUTPUT STAGE
OUTPUT FILTER / PHANTOM POWER PROTECTION
POWER SUPPLY
FROM +24VDC SWICTH MODE PSU (WALL WART)
DAUL GANG POT WITH RV4.1
DAUL GANG POT WITH RV5.1
LEFT
RIGHT
OPA1611 INPUT-U1
OPA1611 INPUT-U2
OPA1611 INPUT-U3
OPA1611 INPUT-U4
OPA1611 INPUT-U5
OPA1611 INPUT-U6
OPA1611 LEFT-U7
OPA1611 RIGHT-U8
OPA1611 LEFTEQ-U9
OPA1611 RIGHTEQ-U10
DRV134 U11
DRV134 U12
BUF634 U3
XLR1 XLR-LEFT
XLR2 XLR-RIGHT
6.5-LEFT-1
6.5-RIGHT-2
6.5-LEFT-3
6.5-RIGHT-4
6.5-LEFT-5
6.5-RIGHT-6
24V DC
+24V
GND
VCC
VEE
GNDREF
DESCRIPTION-U?
CONNECTOR-DESCRIPTION-####
FOR REVIEW
DRW – JOSHUA BLISS
JOSHUA BLISS – SPIDER TOYS
Sheet: /
File: Keyboard Mixer.sch
Title: Keyboard Mixer
Size: A3
Date: 2018-12-22
Rev: C
KiCad E.D.A. kicad 4.0.7
Id: 1/1