GK-1 HYBRID ANALOG COMPUTER SYSTEM
PRELIMINARY / SIMPLIFIED SIMULATION OF SINE / COSINE FUNCTION MODULE
GLEN KLEINSCHMIDT NOVEMBER 2012
Eout = K * SIN(x)
WHERE:
K=100 (SCALING FACTOR)
x = 3.6*Ein
OR (IN COSINE MODE) -
Eout = K * COS(x)
WHERE:
K=100 (SCALING FACTOR)
x = 3.6*Ein
IN BOTH CASES:
0 <= Ein <= 100V
Ein THEREFORE SCALES TO 3.6 DEGREES PER VOLT,
RANGE = ZERO TO 360 DEGREES

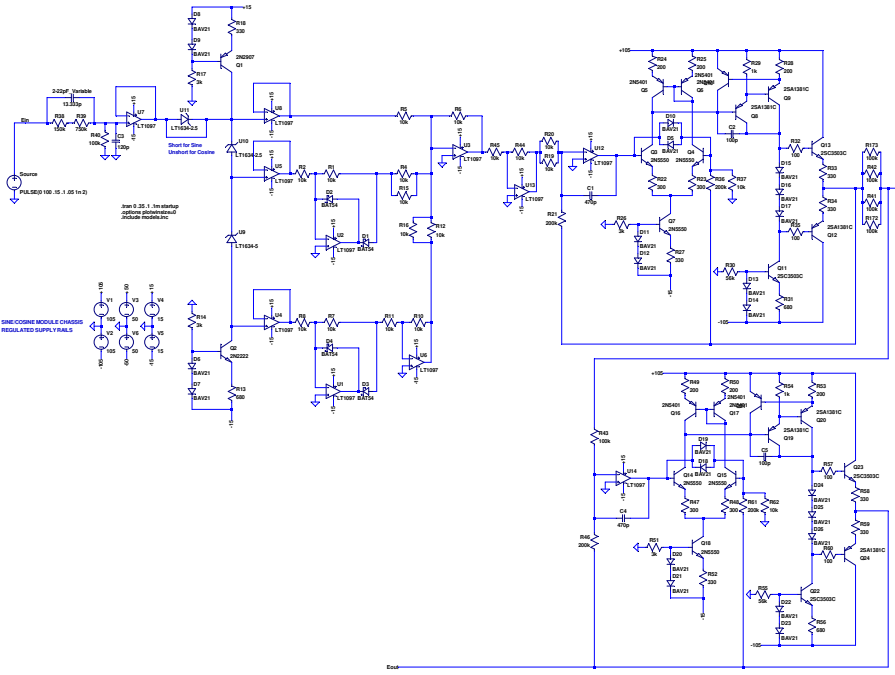

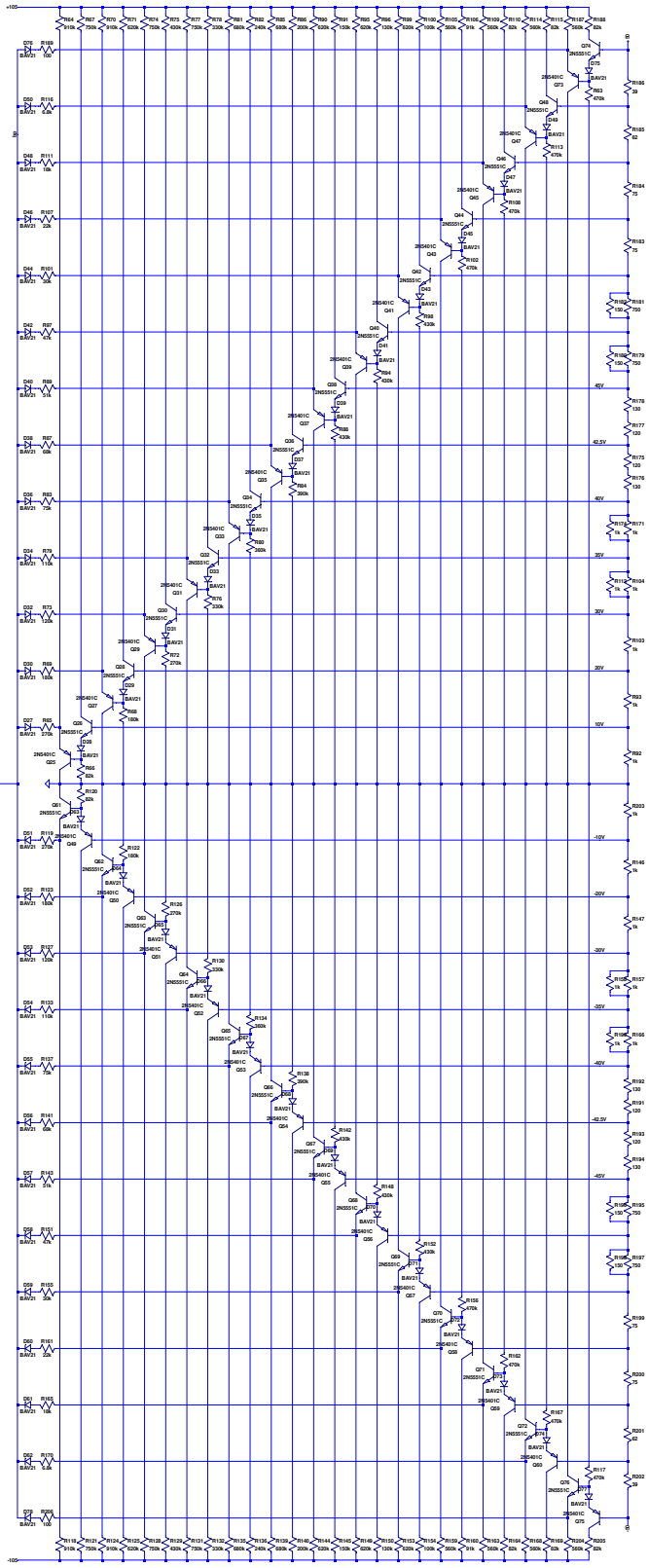

--- C:\Program Files (x86)\LTC\LTspiceIV\sinefunctiongenerator.asc ---