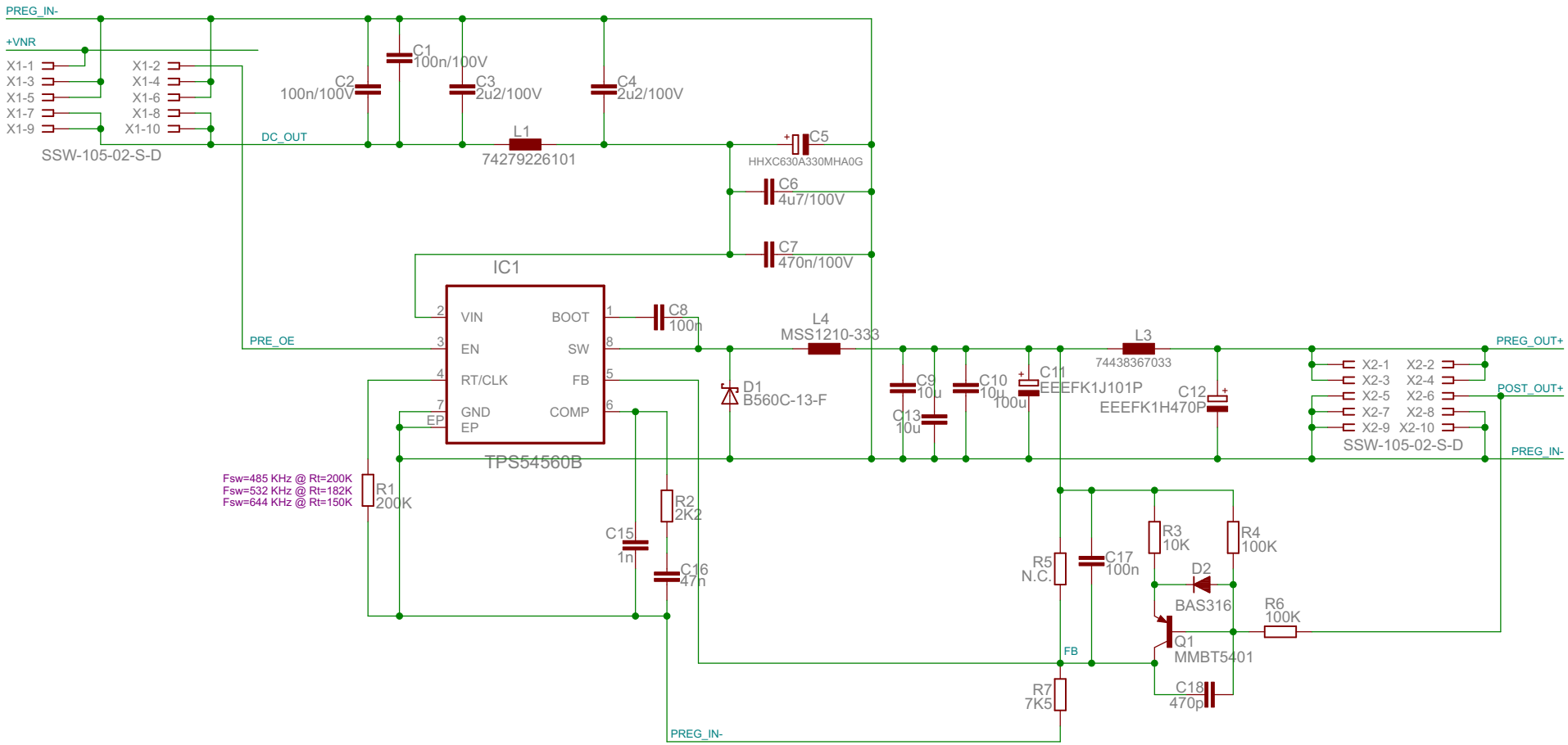

5A Step Down DC-DC Converter with Eco-mode

TITLE: EEZ DIB TPS54560 r1B2

Document Number:

REV:

Date: 1.6.2020. 19:10

Sheet: 1/1

Licensed under the TAPR Open Hardware License (www.tapr.org/OHL)
More info at http://www.envox.hr/eez
Repository: https://github.com/eez-open