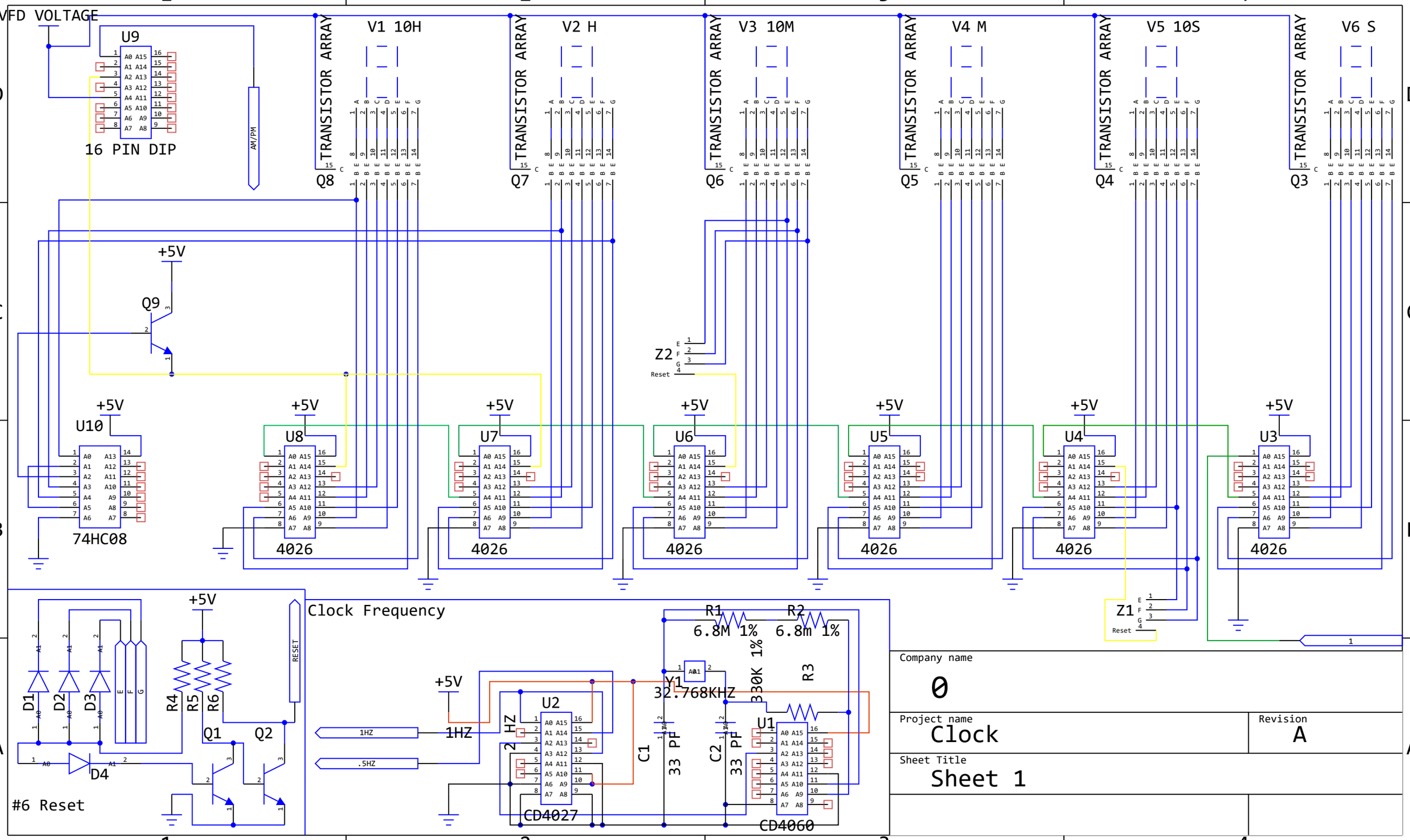
VFD VOLTAGE
U9
16 PIN DIP
AM/PM
TRANSISTOR ARRAY
V1 10H
V2 H
V3 10M
V4 M
V5 10S
V6 S
Q8
Q7
Q6
Q5
Q4
Q3
+5V
Q9
Z2
Reset
U10
74HC08
U8
U7
U6
U5
U4
U3
4026
Z1
D1
D2
D3
D4
R4
R5
R6
Q1
Q2
RESET
#6 Reset
Clock Frequency
R1
6.8M 1%
R2
6.8m 1%
R3
330K 1%
Y1
32.768KHZ
1HZ
.5HZ
U2
CD4027
U1
CD4060
C1
33 PF
C2
33 PF
Company name
0
Project name
Clock
Revision
A
Sheet Title
Sheet 1