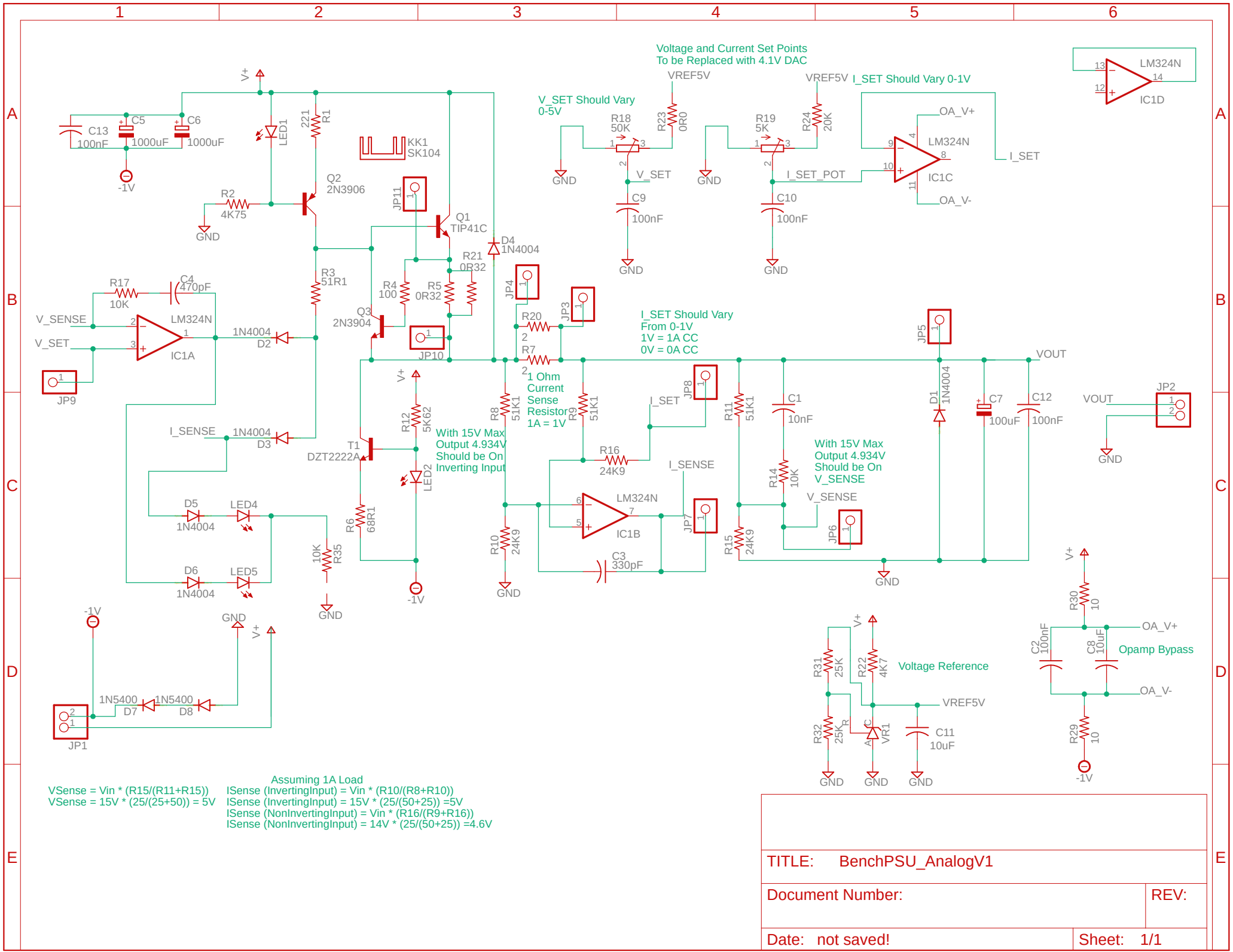
Voltage and Current Set Points
To be Replaced with 4.1V DAC
V_SET Should Vary
0-5V
I_SET Should Vary 0-1V
I_SET Should Vary
From 0-1V
1V = 1A CC
0V = 0A CC
1 Ohm
Current
Sense
Resistor
1A = 1V
With 15V Max
Output 4.934V
Should be On
Inverting Input
With 15V Max
Output 4.934V
Should be On
V_SENSE
Voltage Reference
Opamp Bypass
Assuming 1A Load
VSense = Vin * (R15/(R11+R15))
VSense = 15V * (25/(25+50)) = 5V
ISense (InvertingInput) = Vin * (R10/(R8+R10))
ISense (InvertingInput) = 15V * (25/(50+25)) =5V
ISense (NonInvertingInput) = Vin * (R16/(R9+R16))
ISense (NonInvertingInput) = 14V * (25/(50+25)) =4.6V
TITLE: BenchPSU_AnalogV1
Document Number:
REV:
Date: not saved!
Sheet: 1/1