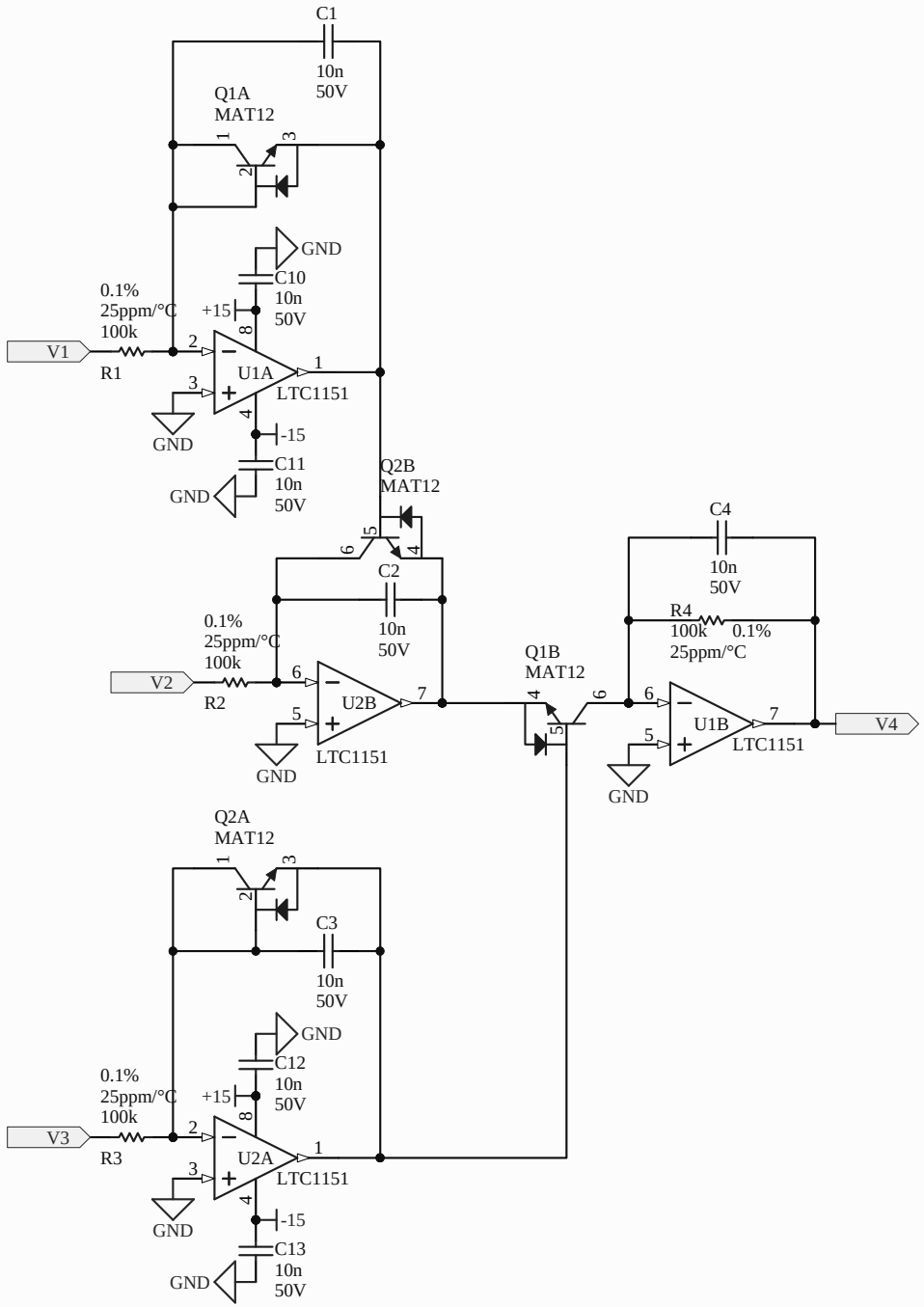
C1
10n
50V
Q1A
MAT12
GND
C10
10n
50V
+15
0.1%
25ppm/°C
100k
V1
R1
U1A
LTC1151
GND
-15
C11
10n
50V
GND
Q2B
MAT12
C2
10n
50V
0.1%
25ppm/°C
100k
V2
R2
U2B
LTC1151
GND
Q1B
MAT12
C4
10n
50V
R4
100k
0.1%
25ppm/°C
U1B
LTC1151
GND
V4
Q2A
MAT12
C3
10n
50V
GND
C12
10n
50V
+15
0.1%
25ppm/°C
100k
V3
R3
U2A
LTC1151
GND
-15
C13
10n
50V
GND