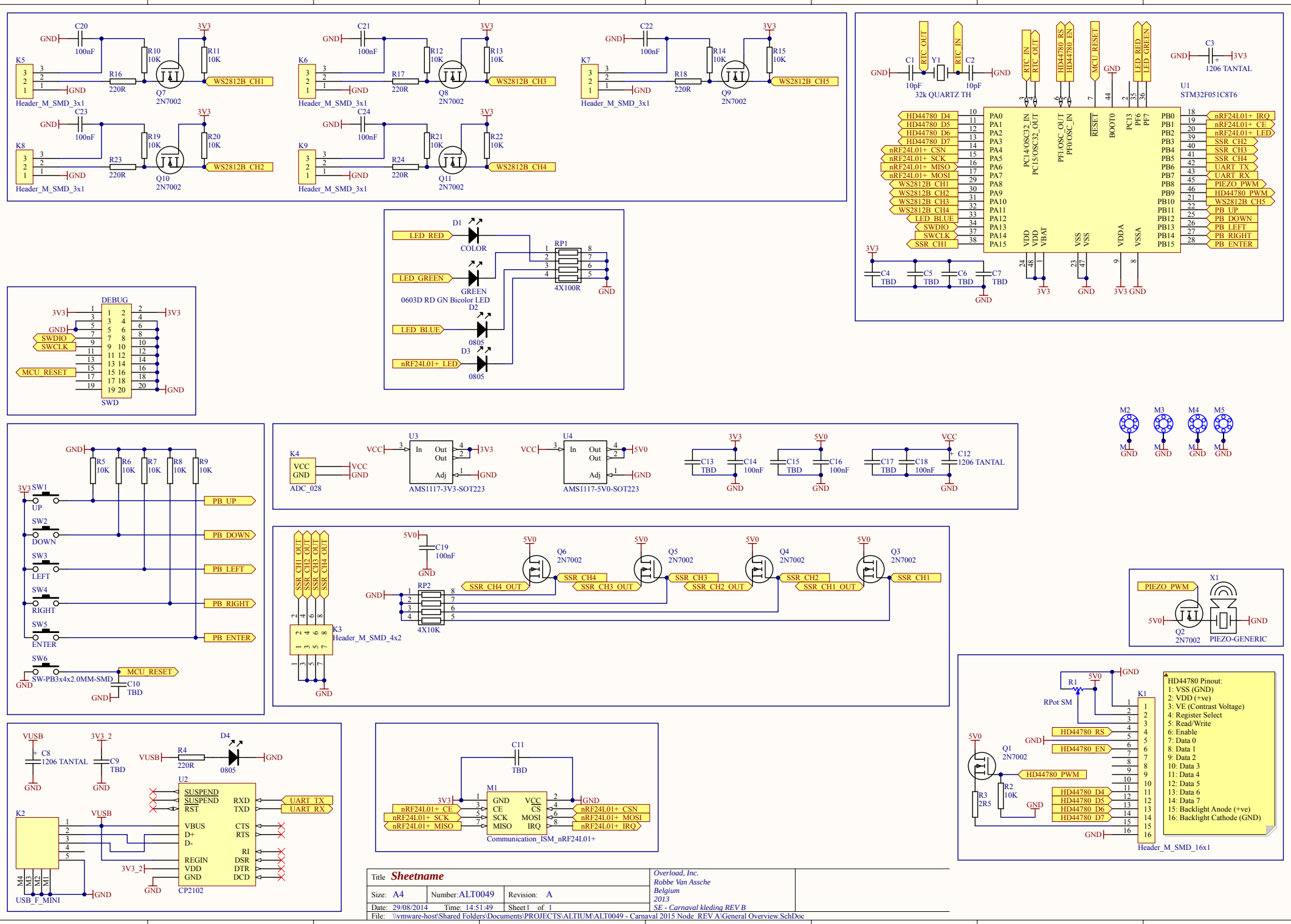
K5
Header_M_SMD_3x1
C20
100nF
R10
10K
R11
10K
R16
220R
Q7
2N7002
WS2812B_CH1
K6
Header_M_SMD_3x1
C21
100nF
R12
10K
R13
10K
R17
220R
Q8
2N7002
WS2812B_CH3
K7
Header_M_SMD_3x1
C22
100nF
R14
10K
R15
10K
R18
220R
Q9
2N7002
WS2812B_CH5
K8
Header_M_SMD_3x1
C23
100nF
R19
10K
R20
10K
R23
220R
Q10
2N7002
WS2812B_CH2
K9
Header_M_SMD_3x1
C24
100nF
R21
10K
R22
10K
R24
220R
Q11
2N7002
WS2812B_CH4
C1
10pF
Y1
32k QUARTZ TH
C2
10pF
RTC_OUT
RTC_IN
HD44780_RS
HD44780_EN
MCU_RESET
LED_RED
LED_GREEN
C3
1206 TANTAL
U1
STM32F051C8T6
HD44780_D4
HD44780_D5
HD44780_D6
HD44780_D7
nRF24L01+_CSN
nRF24L01+_SCK
nRF24L01+_MISO
nRF24L01+_MOSI
WS2812B_CH1
WS2812B_CH2
WS2812B_CH3
WS2812B_CH4
LED_BLUE
SWDIO
SWCLK
SSR_CH1
nRF24L01+_IRQ
nRF24L01+_CE
nRF24L01+_LED
SSR_CH2
SSR_CH3
SSR_CH4
UART_TX
UART_RX
PIEZO_PWM
HD44780_PWM
WS2812B_CH5
PB_UP
PB_DOWN
PB_LEFT
PB_RIGHT
PB_ENTER
C4
TBD
C5
TBD
C6
TBD
C7
TBD
D1
COLOR
LED_RED
LED_GREEN
GREEN
0603D RD GN Bicolor LED
D2
0805
LED_BLUE
D3
0805
nRF24L01+_LED
RP1
4X100R
DEBUG
SWD
MCU_RESET
M2
M3
M4
M5
SW1
UP
SW2
DOWN
SW3
LEFT
SW4
RIGHT
SW5
ENTER
SW6
SW-PB3x4x2.0MM-SMD
C10
TBD
R5
10K
R6
10K
R7
10K
R8
10K
R9
10K
K4
ADC_028
VCC
GND
U3
AMS1117-3V3-SOT223
U4
AMS1117-5V0-SOT223
C13
TBD
C14
100nF
C15
TBD
C16
100nF
C17
TBD
C18
100nF
C12
1206 TANTAL
K3
Header_M_SMD_4x2
C19
100nF
RP2
4X10K
Q6
2N7002
Q5
2N7002
Q4
2N7002
Q3
2N7002
SSR_CH4_OUT
SSR_CH3_OUT
SSR_CH2_OUT
SSR_CH1_OUT
SSR_CH1
X1
PIEZO-GENERIC
Q2
2N7002
C8
1206 TANTAL
C9
TBD
R4
220R
D4
0805
U2
CP2102
SUSPEND
RST
RXD
TXD
VBUS
D+
D-
CTS
RTS
RI
REGIN
VDD
GND
DSR
DTR
DCD
K2
USB_F_MINI
C11
TBD
M1
Communication_ISM_nRF24L01+
R1
RPot SM
K1
Header_M_SMD_16x1
Q1
2N7002
R2
10K
R3
2R5
HD44780 Pinout:
1: VSS (GND)
2: VDD (+ve)
3: VE (Contrast Voltage)
4: Register Select
5: Read/Write
6: Enable
7: Data 0
8: Data 1
9: Data 2
10: Data 3
11: Data 4
12: Data 5
13: Data 6
14: Data 7
15: Backlight Anode (+ve)
16: Backlight Cathode (GND)
Title Sheetname
Size: A4
Number: ALT0049
Revision: A
Date: 29/08/2014
Time: 14:51:49
Sheet 1 of 1
File: \\vmware-host\Shared Folders\Documents\PROJECTS\ALTIUM\ALT0049 - Carnaval 2015 Node REV A\General Overview.SchDoc
Overload, Inc.
Robbe Van Assche
Belgium
2013
SE - Carnaval kleding REV B