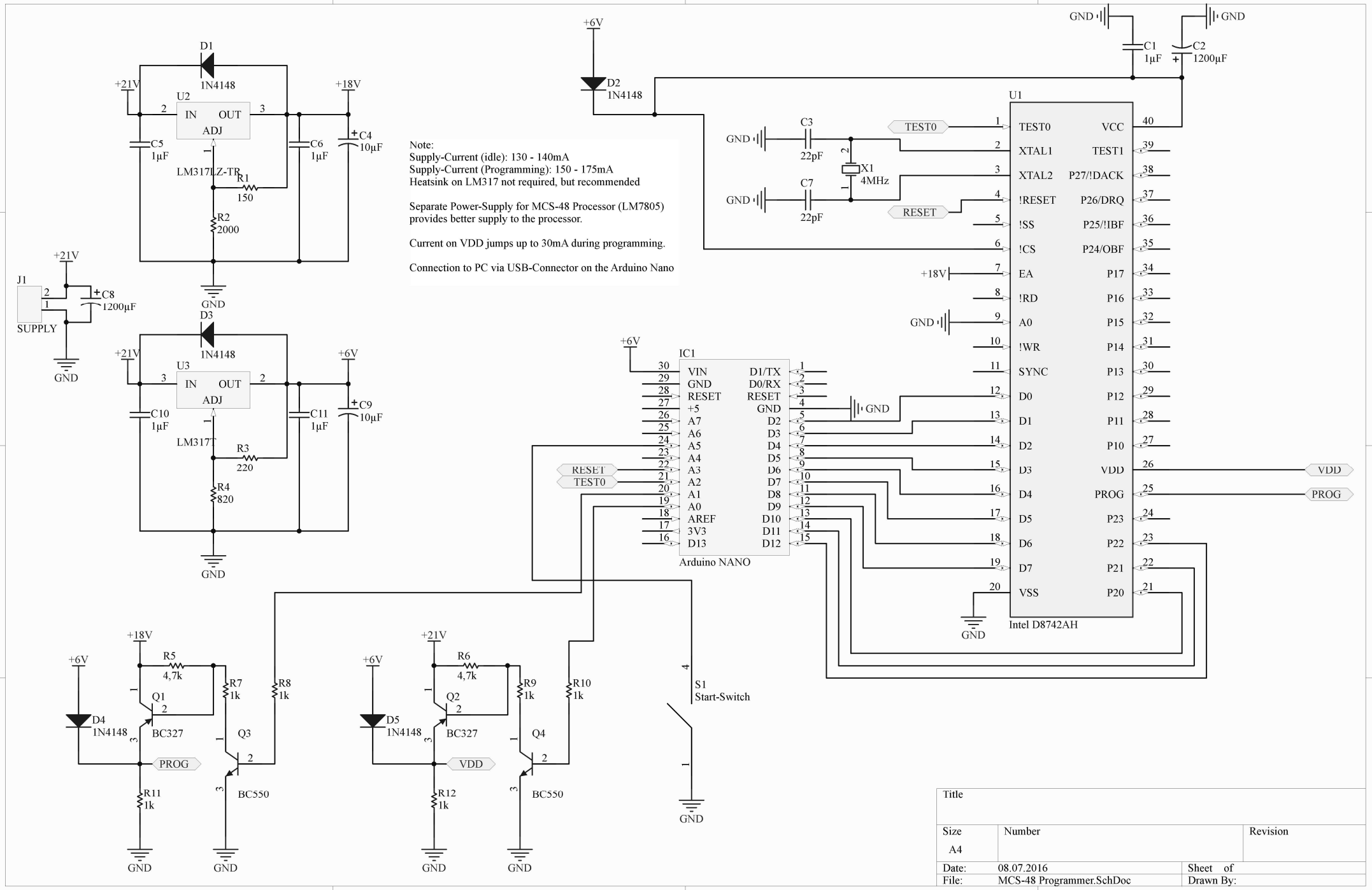
Note:
Supply-Current (idle): 130 - 140mA
Supply-Current (Programming): 150 - 175mA
Heatsink on LM317 not required, but recommended
Separate Power-Supply for MCS-48 Processor (LM7805) provides better supply to the processor.
Current on VDD jumps up to 30mA during programming.
Connection to PC via USB-Connector on the Arduino Nano
D1
1N4148
U2
IN
OUT
ADJ
LM317LZ-TR
+21V
+18V
C5
1µF
C6
1µF
C4
10µF
R1
150
R2
2000
GND
J1
SUPPLY
C8
1200µF
D3
1N4148
U3
LM317T
C10
1µF
C11
1µF
C9
10µF
R3
220
R4
820
+6V
D2
1N4148
C1
1µF
C2
1200µF
U1
Intel D8742AH
TEST0
XTAL1
XTAL2
!RESET
!SS
!CS
EA
!RD
A0
!WR
SYNC
D0
D1
D2
D3
D4
D5
D6
D7
VSS
VCC
TEST1
P27/!DACK
P26/DRQ
P25/!IBF
P24/OBF
P17
P16
P15
P14
P13
P12
P11
P10
VDD
PROG
P23
P22
P21
P20
C3
22pF
C7
22pF
X1
4MHz
RESET
IC1
Arduino NANO
VIN
GND
RESET
+5
A7
A6
A5
A4
A3
A2
A1
A0
AREF
3V3
D13
D1/TX
D0/RX
D2
D3
D4
D5
D6
D7
D8
D9
D10
D11
D12
S1
Start-Switch
D4
1N4148
R5
4,7k
Q1
BC327
R7
1k
R8
1k
Q3
BC550
R11
1k
D5
1N4148
R6
4,7k
Q2
R9
1k
R10
1k
Q4
R12
1k
Title
Size
A4
Number
Revision
Date:
08.07.2016
Sheet of
File:
MCS-48 Programmer.SchDoc
Drawn By: