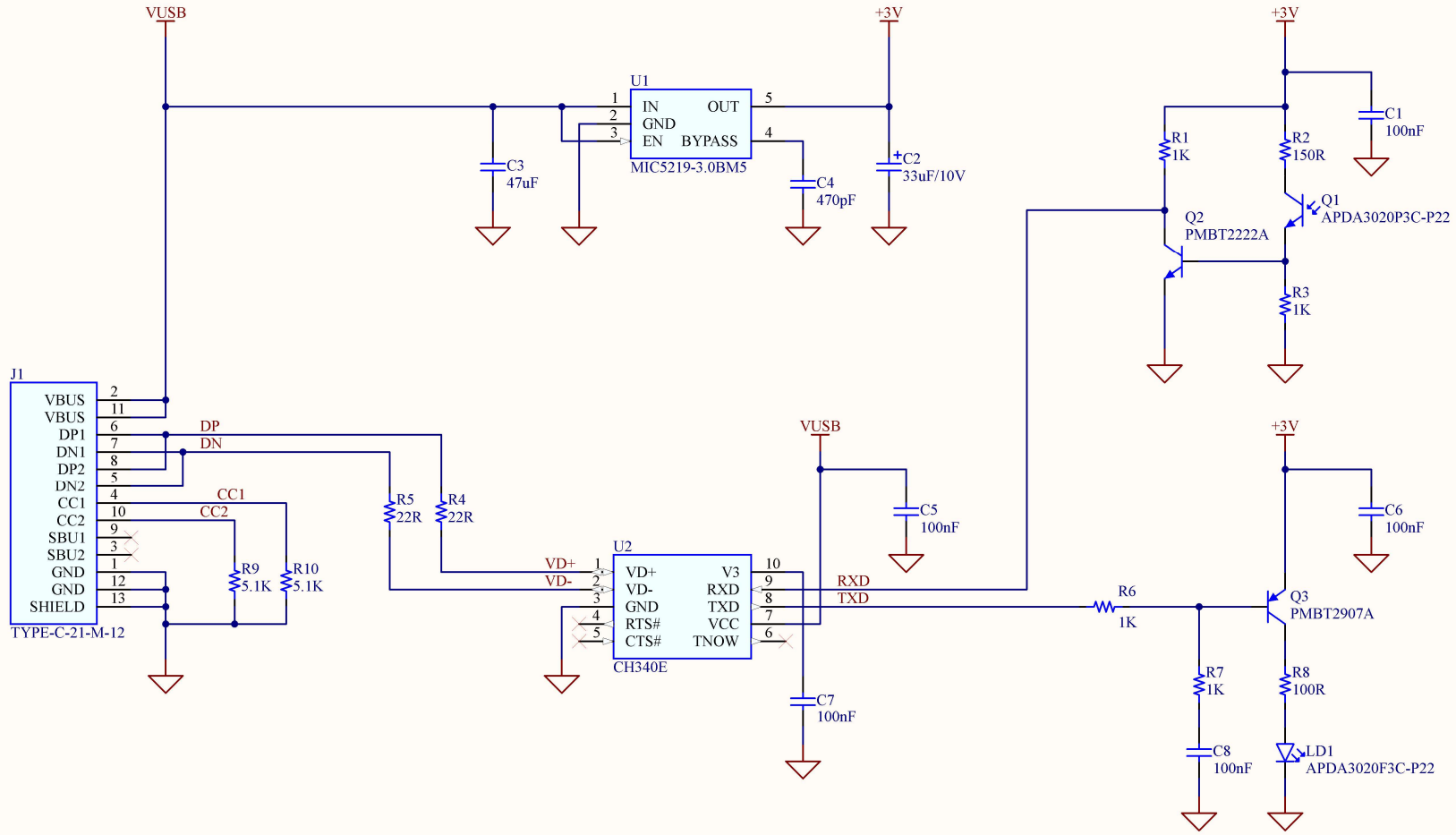

U1173B Clone

REVISION	1.0	GAMALOT	
SHEET	1 OF 1	26/04/2024	