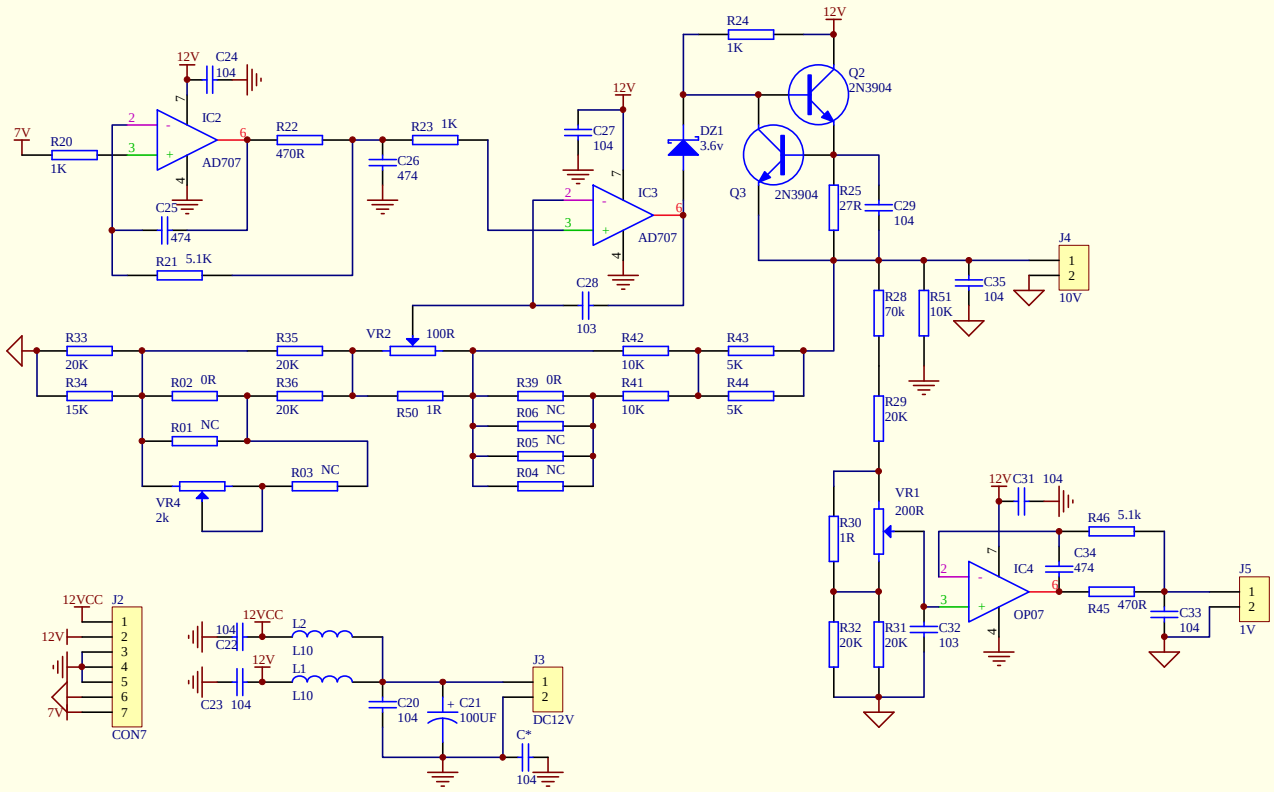


| Title | | |
|---|---|---|
| Size A4 | Number | Revision |
| Date: 18-Mar-2016 | Sheet of | |
| File: D:\U盘\仪器仪表\1LTZ1000ACH\LTZ基准 | Drawn By: | |