Hybrid Caps will always have > 2.5V
3*2.5V = 7.5V
10V-7.5V / 90mA (AQW210S single channel max 130mA) = 30R

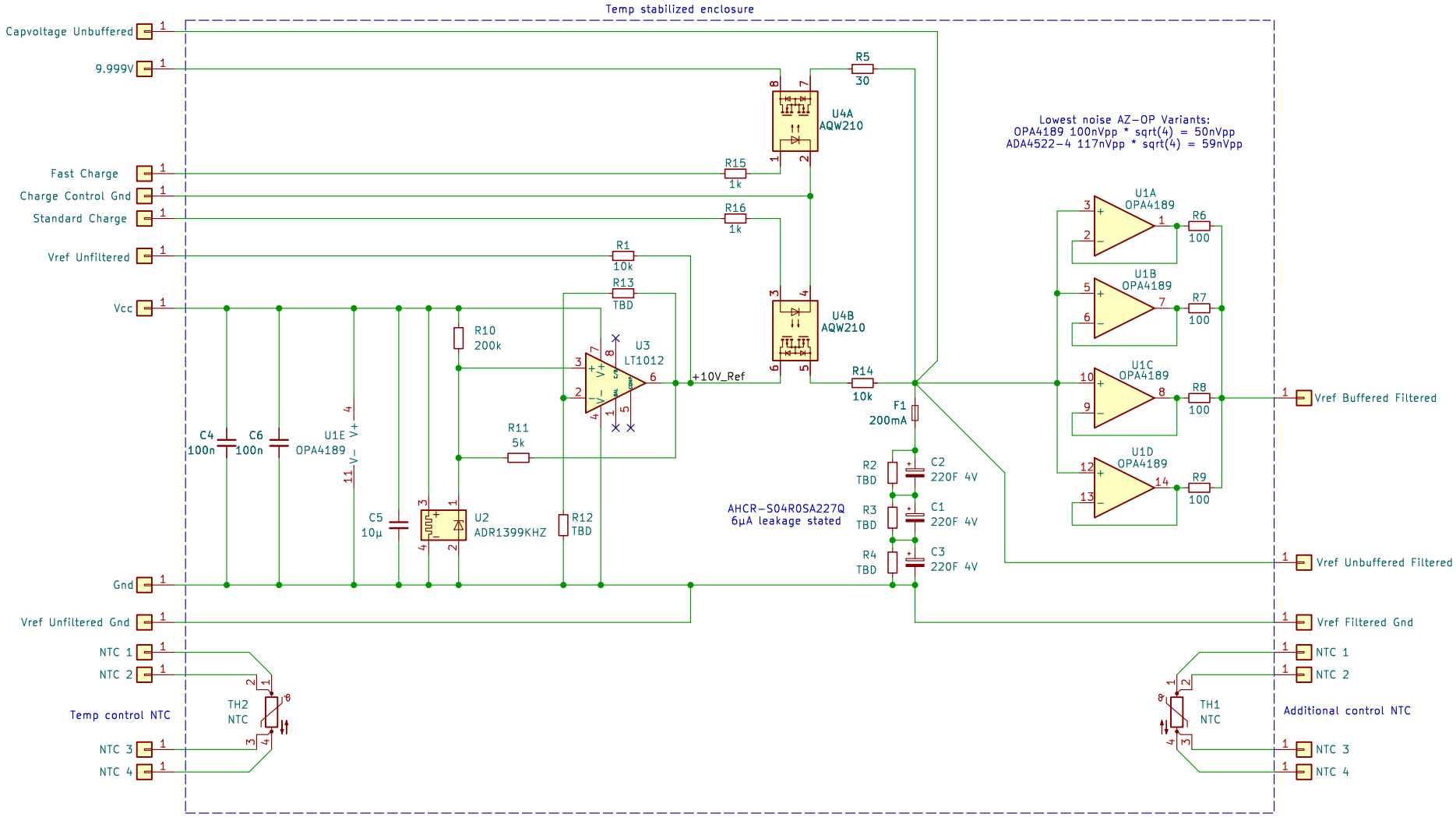


Sheet: /
File: Supercap_Chamber.kicad_sch

**Title:**

| Size: A4 | Date: | Rev: |
|---|---|---|
| KiCad E.D.A. 8.0.3 | | Id: 1/1 |