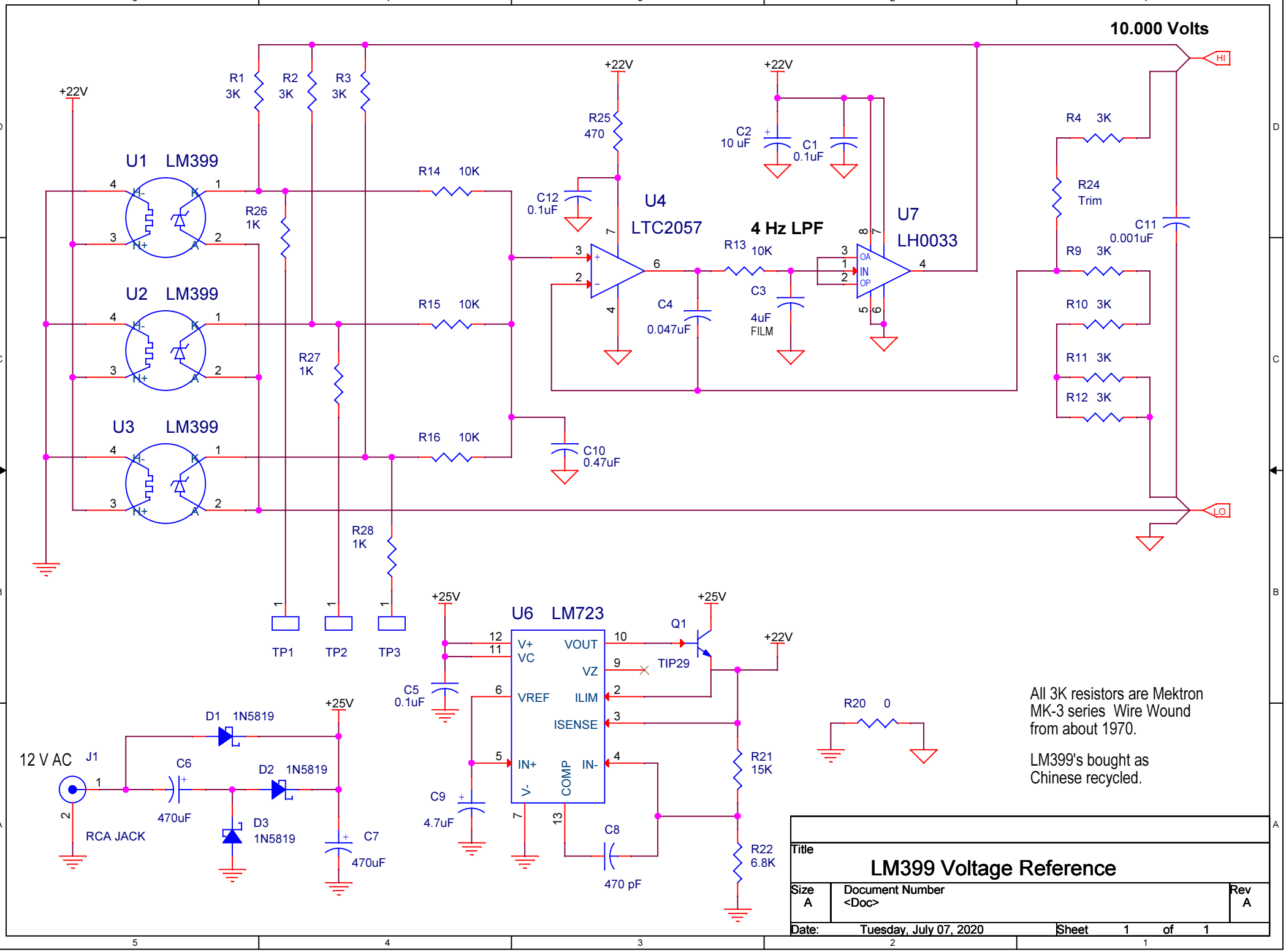
10.000 Volts
+22V
R1 3K
R2 3K
R3 3K
U1 LM399
U2 LM399
U3 LM399
R26 1K
R27 1K
R28 1K
R14 10K
R15 10K
R16 10K
R25 470
C12 0.1uF
U4 LTC2057
C10 0.47uF
C2 10 uF
C1 0.1uF
4 Hz LPF
R13 10K
C4 0.047uF
C3 4uF FILM
U7 LH0033
R4 3K
R24 Trim
C11 0.001uF
R9 3K
R10 3K
R11 3K
R12 3K
HI
LO
TP1
TP2
TP3
+25V
U6 LM723
Q1 TIP29
C5 0.1uF
C9 4.7uF
C8 470 pF
R21 15K
R22 6.8K
R20 0
12 V AC
J1
RCA JACK
D1 1N5819
D2 1N5819
D3 1N5819
C6 470uF
C7 470uF
All 3K resistors are Mektron MK-3 series Wire Wound from about 1970.
LM399's bought as Chinese recycled.
Title
LM399 Voltage Reference
Size A
Document Number <Doc>
Rev A
Date: Tuesday, July 07, 2020
Sheet 1 of 1