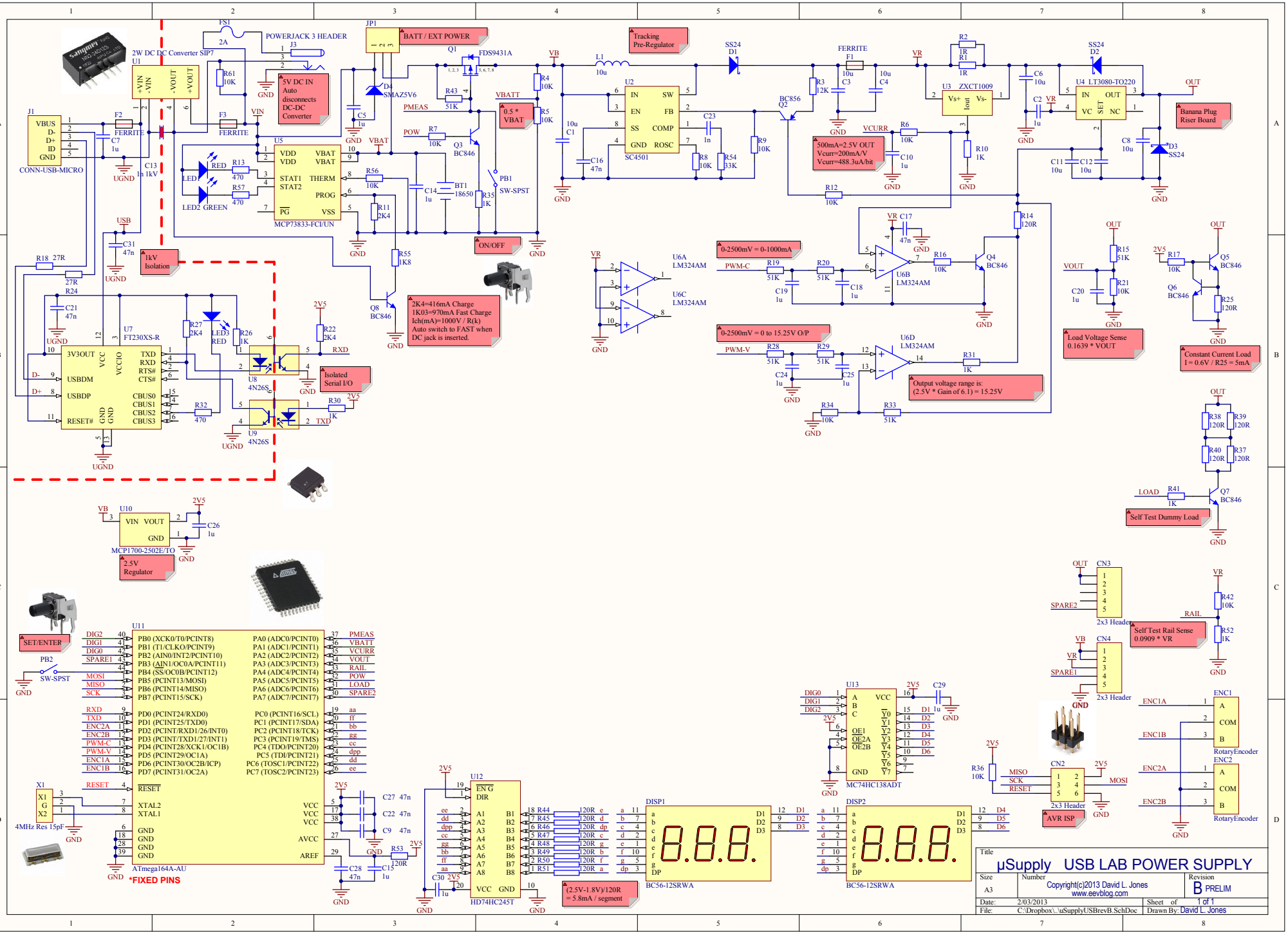
2W DC DC Converter SIP7
U1
POWERJACK 3 HEADER
J3
FS1
2A
5V DC IN
Auto
disconnects
DC-DC
Converter
BATT / EXT POWER
JP1
Q1
FDS9431A
Tracking
Pre-Regulator
SS24
D1
FERRITE
F1
U2
IN
SW
EN
FB
SS
COMP
GND
ROSC
SC4501
U3
ZXCT1009
Vs+
Iout
Vs-
U4
LT3080-TO220
IN
OUT
VC
SET
NC
SS24
D2
Banana Plug
Riser Board
J1
VBUS
D-
D+
ID
GND
CONN-USB-MICRO
F2
FERRITE
F3
FERRITE
C7
1u
C13
1n 1kV
UGND
USB
C31
47n
1kV
Isolation
R18
27R
R24
27R
C21
47n
U7
FT230XS-R
3V3OUT
USBDM
USBDP
RESET#
VCC
VCCIO
TXD
RXD
RTS#
CTS#
CBUS0
CBUS1
CBUS2
CBUS3
R61
10K
VIN
U5
MCP73833-FCI/UN
VDD
VDD
STAT1
STAT2
PG
VBAT
VBAT
THERM
PROG
VSS
LED
RED
R13
470
LED2 GREEN
R57
470
D+
SMAZ5V6
C5
1u
PMEAS
POW
R7
10K
R43
51K
Q3
BC846
VBATT
0.5 *
VBAT
R4
10K
R5
10K
PB1
SW-SPST
ON/OFF
C14
1u
BT1
18650
R35
1K
R56
10K
R11
2K4
R55
1K8
Q8
BC846
2K4=416mA Charge
1K03=970mA Fast Charge
Ich(mA)=1000V / R(k)
Auto switch to FAST when
DC jack is inserted.
R27
2K4
LED3
RED
R26
1K
R22
2K4
2V5
RXD
U8
4N26S
U9
4N26S
R32
470
R30
1K
TXD
Isolated
Serial I/O
VB
L1
10u
C1
10u
C16
47n
SC4501
C23
1n
R8
10K
R54
33K
R9
10K
BC856
Q2
R3
12K
C3
10u
C4
10u
R2
1R
R1
1R
C6
10u
C2
1u
C11
10u
C12
10u
C8
10u
D3
SS24
R10
1K
R12
10K
VCURR
R6
10K
C10
1u
500mA=2.5V OUT
Vcurr=200mA/V
Vcurr=488.3uA/bit
VR
C17
47n
R14
120R
U6A
LM324AM
U6C
LM324AM
0-2500mV = 0-1000mA
PWM-C
R19
51K
R20
51K
C19
1u
C18
1u
U6B
LM324AM
R16
10K
Q4
BC846
0-2500mV = 0 to 15.25V O/P
PWM-V
R28
51K
R29
51K
C24
1u
C25
1u
U6D
LM324AM
R31
1K
R34
10K
R33
51K
Output voltage range is:
(2.5V * Gain of 6.1) = 15.25V
OUT
R15
51K
VOUT
R21
10K
C20
1u
Load Voltage Sense
0.1639 * VOUT
2V5
R17
10K
Q5
BC846
Q6
BC846
R25
120R
Constant Current Load
I = 0.6V / R25 = 5mA
R38
120R
R39
120R
R40
120R
R37
120R
LOAD
R41
1K
Q7
BC846
Self Test Dummy Load
U10
VIN
VOUT
GND
MCP1700-2502E/TO
C26
1u
2.5V
Regulator
SET/ENTER
PB2
SW-SPST
U11
ATmega164A-AU
DIG2
DIG1
DIG0
SPARE1
MOSI
MISO
SCK
RXD
TXD
ENC2A
ENC2B
PWM-C
PWM-V
ENC1A
ENC1B
RESET
PB0 (XCK0/T0/PCINT8)
PB1 (T1/CLKO/PCINT9)
PB2 (AIN0/INT2/PCINT10)
PB3 (AIN1/OC0A/PCINT11)
PB4 (SS/OC0B/PCINT12)
PB5 (PCINT13/MOSI)
PB6 (PCINT14/MISO)
PB7 (PCINT15/SCK)
PD0 (PCINT24/RXD0)
PD1 (PCINT25/TXD0)
PD2 (PCINT/RXD1/26/INT0)
PD3 (PCINT/TXD1/27/INT1)
PD4 (PCINT28/XCK1/OC1B)
PD5 (PCINT29/OC1A)
PD6 (PCINT30/OC2B/ICP)
PD7 (PCINT31/OC2A)
RESET
XTAL2
XTAL1
GND
GND
GND
PA0 (ADC0/PCINT0)
PA1 (ADC1/PCINT1)
PA2 (ADC2/PCINT2)
PA3 (ADC3/PCINT3)
PA4 (ADC4/PCINT4)
PA5 (ADC5/PCINT5)
PA6 (ADC6/PCINT6)
PA7 (ADC7/PCINT7)
PC0 (PCINT16/SCL)
PC1 (PCINT17/SDA)
PC2 (PCINT18/TCK)
PC3 (PCINT19/TMS)
PC4 (TDO/PCINT20)
PC5 (TDI/PCINT21)
PC6 (TOSC1/PCINT22)
PC7 (TOSC2/PCINT23)
VCC
VCC
VCC
AVCC
AREF
PMEAS
VBATT
VCURR
VOUT
RAIL
POW
LOAD
SPARE2
aa
ff
bb
gg
cc
dpp
dd
ee
X1
4MHz Res 15pF
*FIXED PINS
C27 47n
C22 47n
C9 47n
C28 47n
C15 1u
R53 120R
U12
EN G
DIR
A1
A2
A3
A4
A5
A6
A7
A8
B1
B2
B3
B4
B5
B6
B7
B8
VCC GND
HD74HC245T
C30 1u
R44
R45
R46
R47
R48
R49
R50
R51
120R e
120R d
120R dp
120R c
120R g
120R b
120R f
120R a
(2.5V-1.8V)/120R
= 5.8mA / segment
DISP1
BC56-12SRWA
DISP2
BC56-12SRWA
U13
MC74HC138ADT
DIG0
DIG1
DIG2
OE1
OE2A
OE2B
GND
C29
1u
CN3
SPARE2
2x3 Header
Self Test Rail Sense
0.0909 * VR
R42
10K
R52
1K
CN4
SPARE1
2x3 Header
R36
10K
MISO
SCK
RESET
CN2
MOSI
2x3 Header
AVR ISP
ENC1A
ENC1B
ENC2A
ENC2B
ENC1
ENC2
RotaryEncoder
RotaryEncoder
Title
µSupply USB LAB POWER SUPPLY
Size
A3
Number
Copyright(c)2013 David L. Jones
www.eevblog.com
Revision
B PRELIM
Date: 2/03/2013
Sheet of 1 of 1
File: C:\Dropbox\..\uSupplyUSBrevB.SchDoc
Drawn By: David L. Jones